Fittings Mod. 6621...

Micro Banjo with Gasket Assembled.

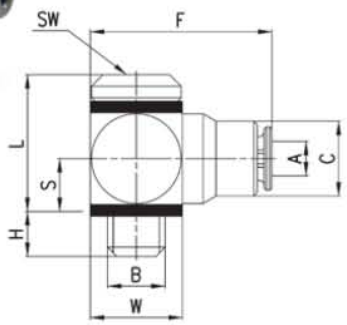

DIMENSIONS

	OD mm								
Mod.	**A**	**B**	**C**	**F**	**H**	**L**	**S**	**W**	**SW**
6621 3-M3	3	M3	5.8	14.2	2.5	9.3	3.5	6	1.5
6621 3-M5	3	M5	6.5	16	3.2	11.9	4.8	8	2

Fittings Mod. 6622...

Banjo with O-Ring Assembled

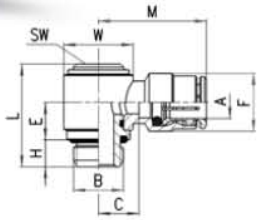

DIMENSIONS

	OD mm									
Mod.	**A**	**B**	**C**	**E**	**F**	**H**	**L**	**M**	**W**	**SW**
6622 4-M5	4	M5	4	5,7	8,6	4	15,8	18	⊠8	2.5
6622 4-1/8	4	G1/8	7,5	10,2	9	5	25	21,5	Ø14	4
6622 6-1/8	6	G1/8	8	10,2	12,7	5	25	24	Ø14	4
6622 6-1/4	6	G1/4	10	9,1	12,7	6	25,3	26	Ø18	5
6622 8-1/8	8	G1/8	8	10,2	14,2	5	25	25,5	Ø14	4
6622 8-1/4	8	G1/4	10	9,1	14,2	6	25,3	27,5	Ø18	5
6622 10-1/4	10	G1/4	8,8	9,1	16,5	6	25,3	29	Ø18	5

Fittings Mod. 6452...

Micro Swivel Y

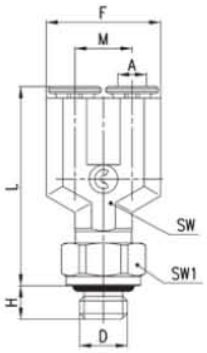

DIMENSIONS

	OD mm								
Mod.	**A**	**D**	**F**	**H**	**L**	**M**	**SW**	**SW1**	
6452 3-M3	3	M3	12	2.5	20.9	6	6	6	•
6452 3-M5	3	M5	12	3.5	20.9	6	6	8	*

The company reserves the right to vary models and dimensions without notice.
These products are designed for industrial applications and are not suitable for sale to the general public.